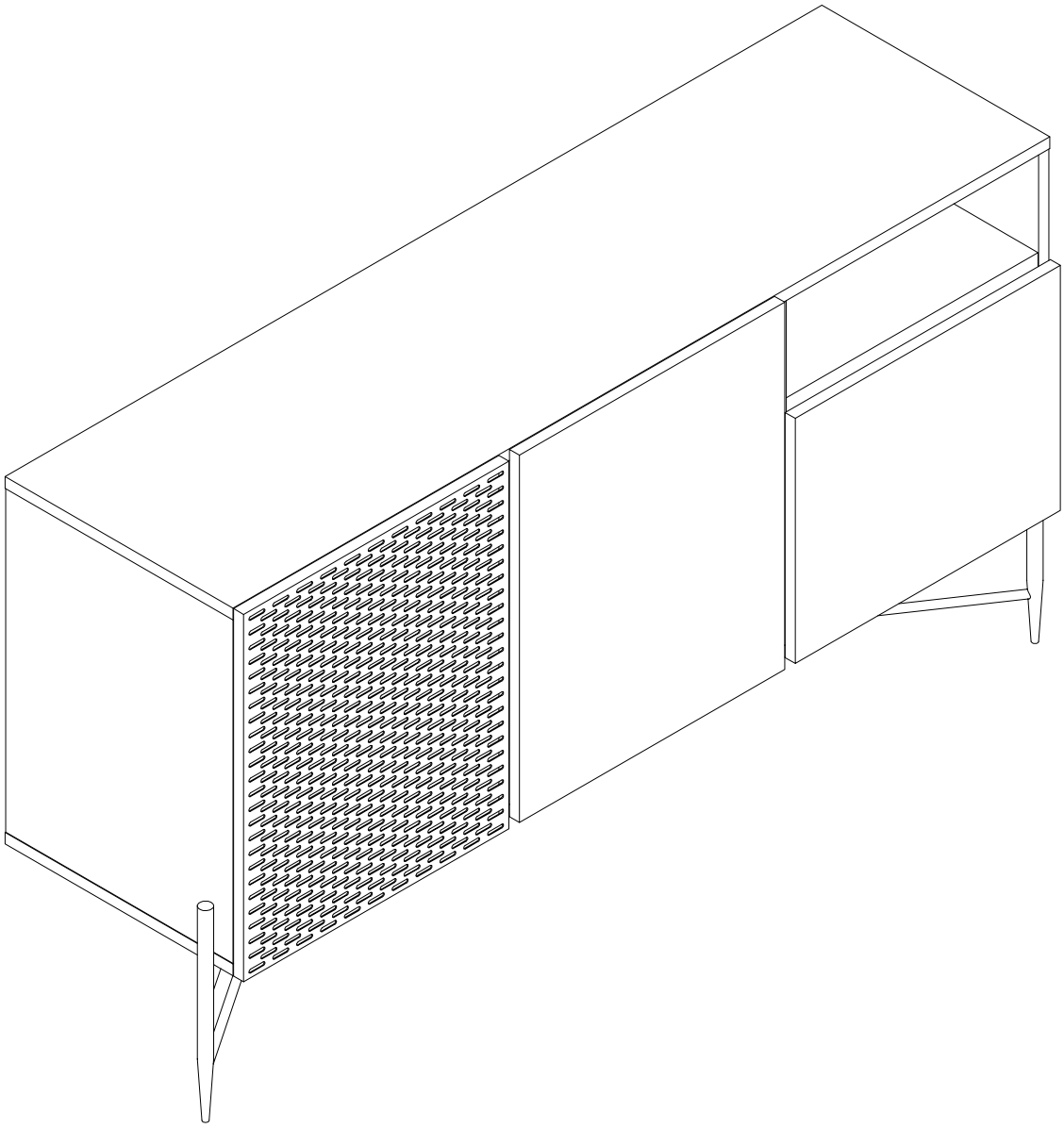

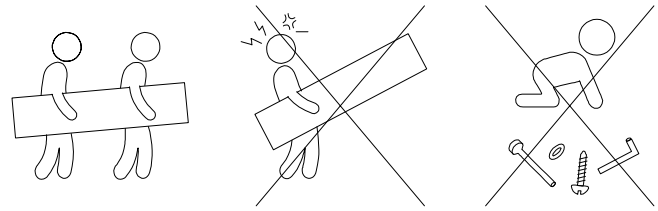

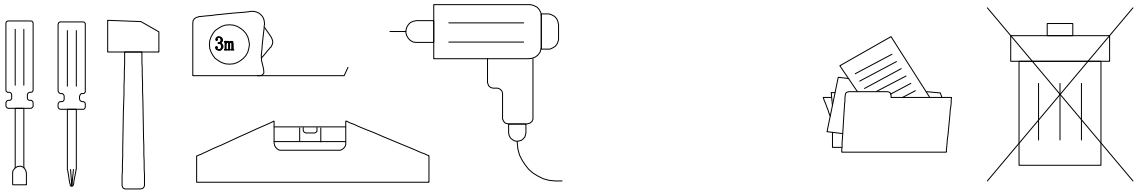
3m

min
max
min
max

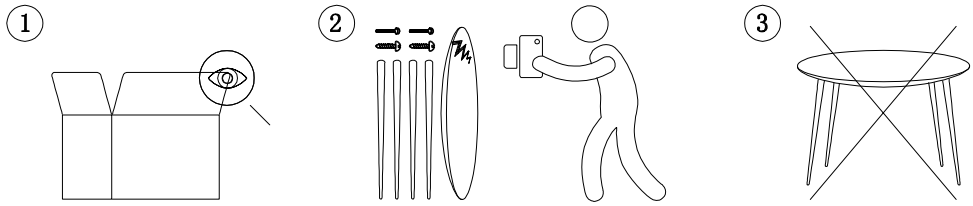
1
2
3

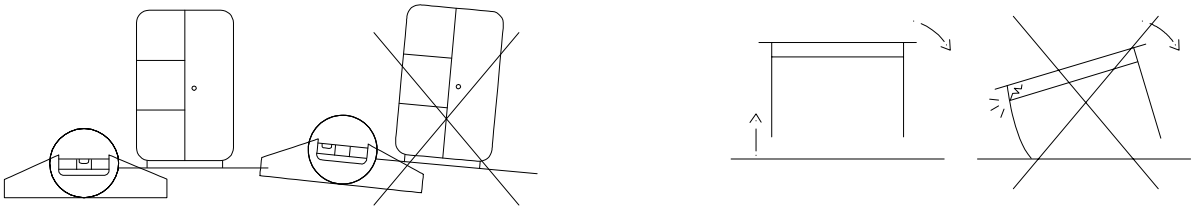

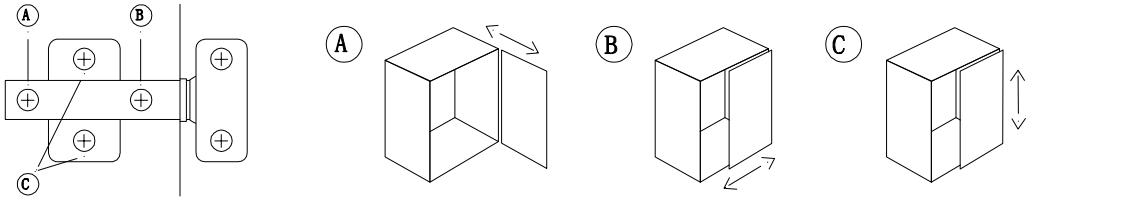
A
B
C
A
B
C

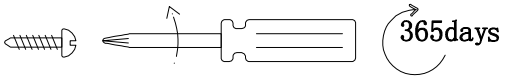
365days

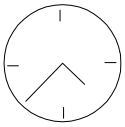

45 min

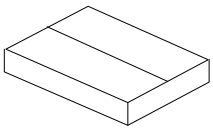

x2

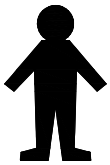

x2

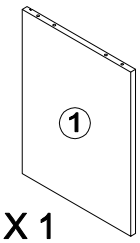

X 1

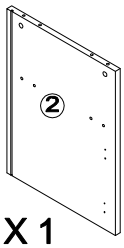

X 1

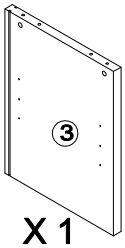

X 1

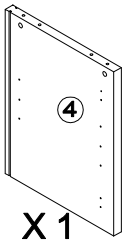

X 1

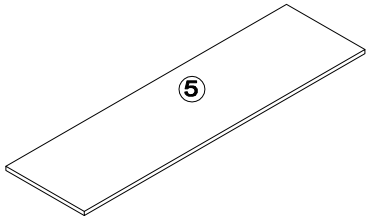

X 1

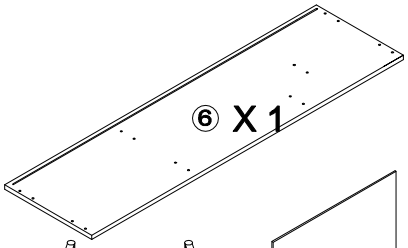

X 1

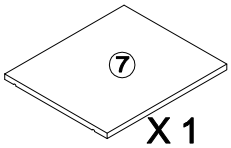

X 1

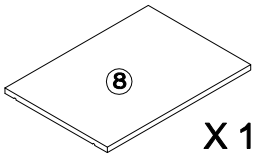

X 1

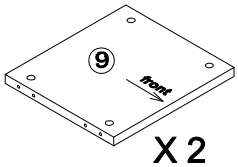

X 2

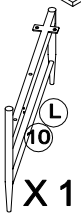

X 1

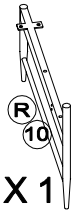

X 1

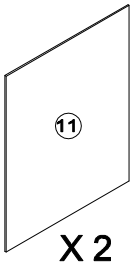

X 2

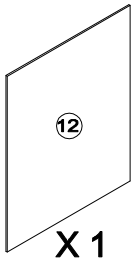

X 1

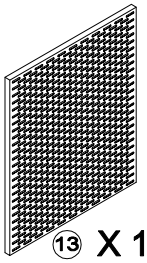

X 1

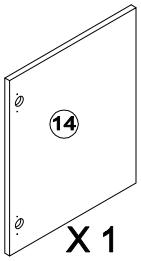

X 1

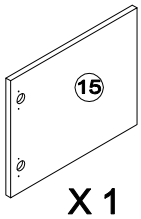

X 1

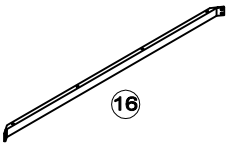

X 1

A = 12PCS

B = 12PCS

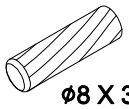

ø8 X 30mm

C = 20PCS

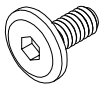

M6 x 15mm

D = 8PCS

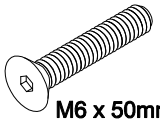

M6 x 50mm

E = 8PCS

m4*12mm

F = 2PCS

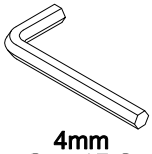

4mm

G = 1PC

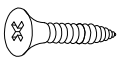

H = 32PCS

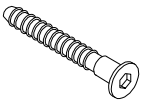

I = 8PCS

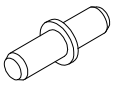

J = 8PCS

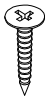

ø3*15mm

K = 24PCS

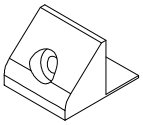

L = 24PCS

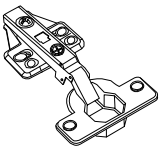

M = 4PCS

Ø21mm

N = 12PCS

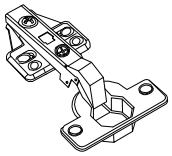

O = 2PCS

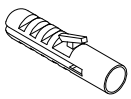

P = 4PCS

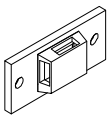

Q = 4PCS

R = 2PCS

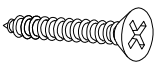

ø3.5*40mm

S = 4PCS

ø3.5*19mm

T = 4PCS

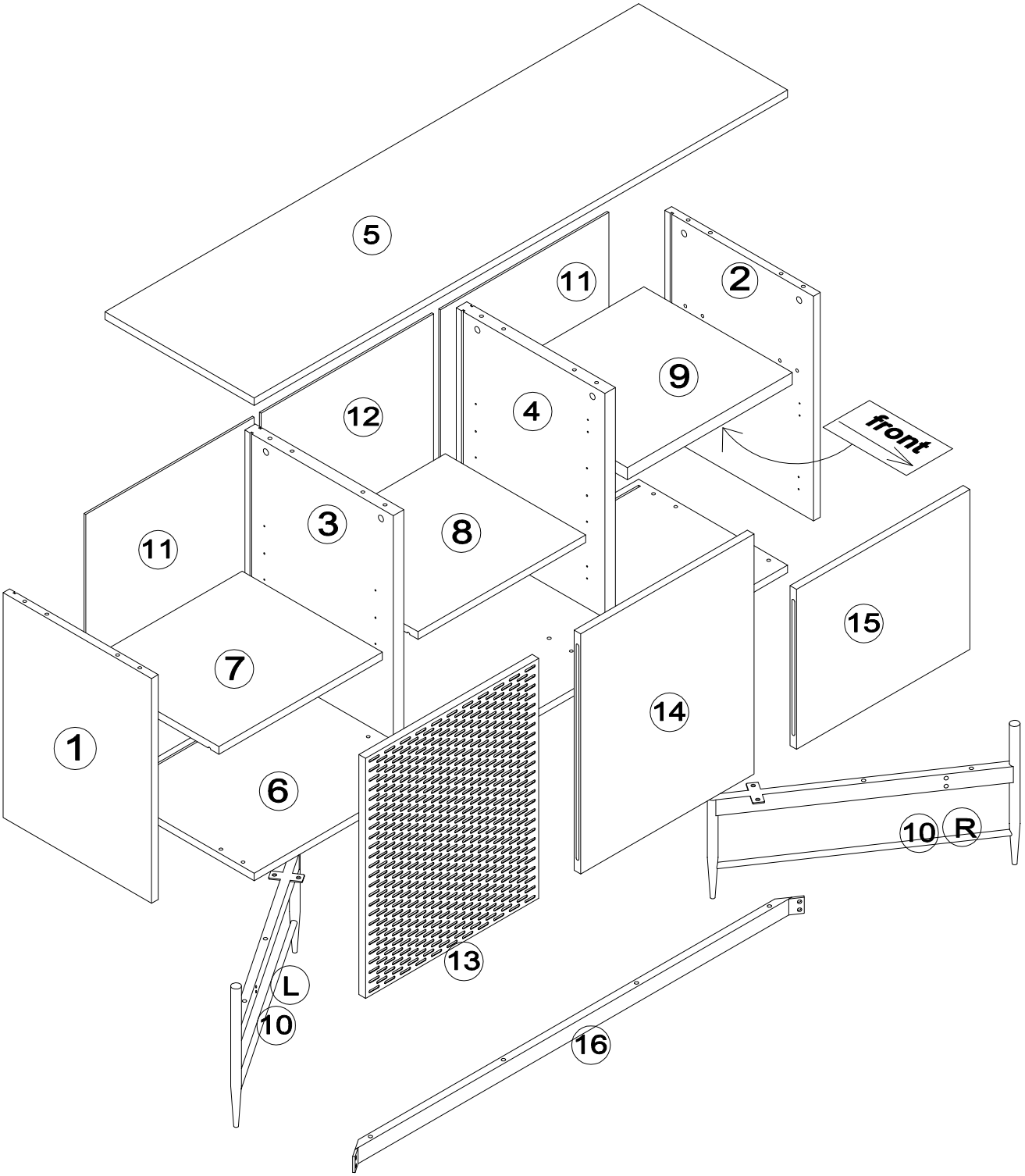
5
11
2
9
12
4
front
3
8
11
7
1
6
14
15
10
R
13
L
10
16

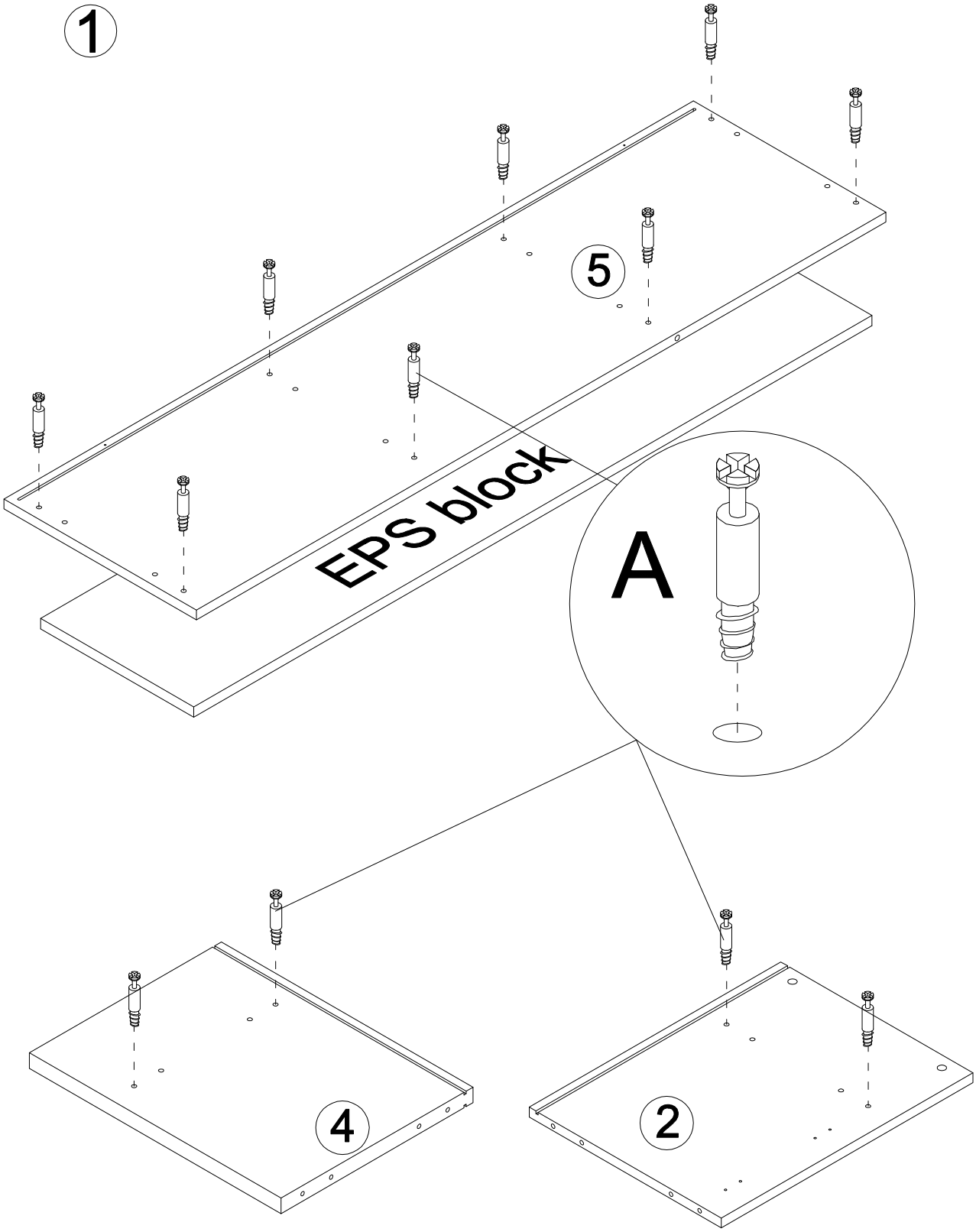
1
5
EPS block
A
4
2

2

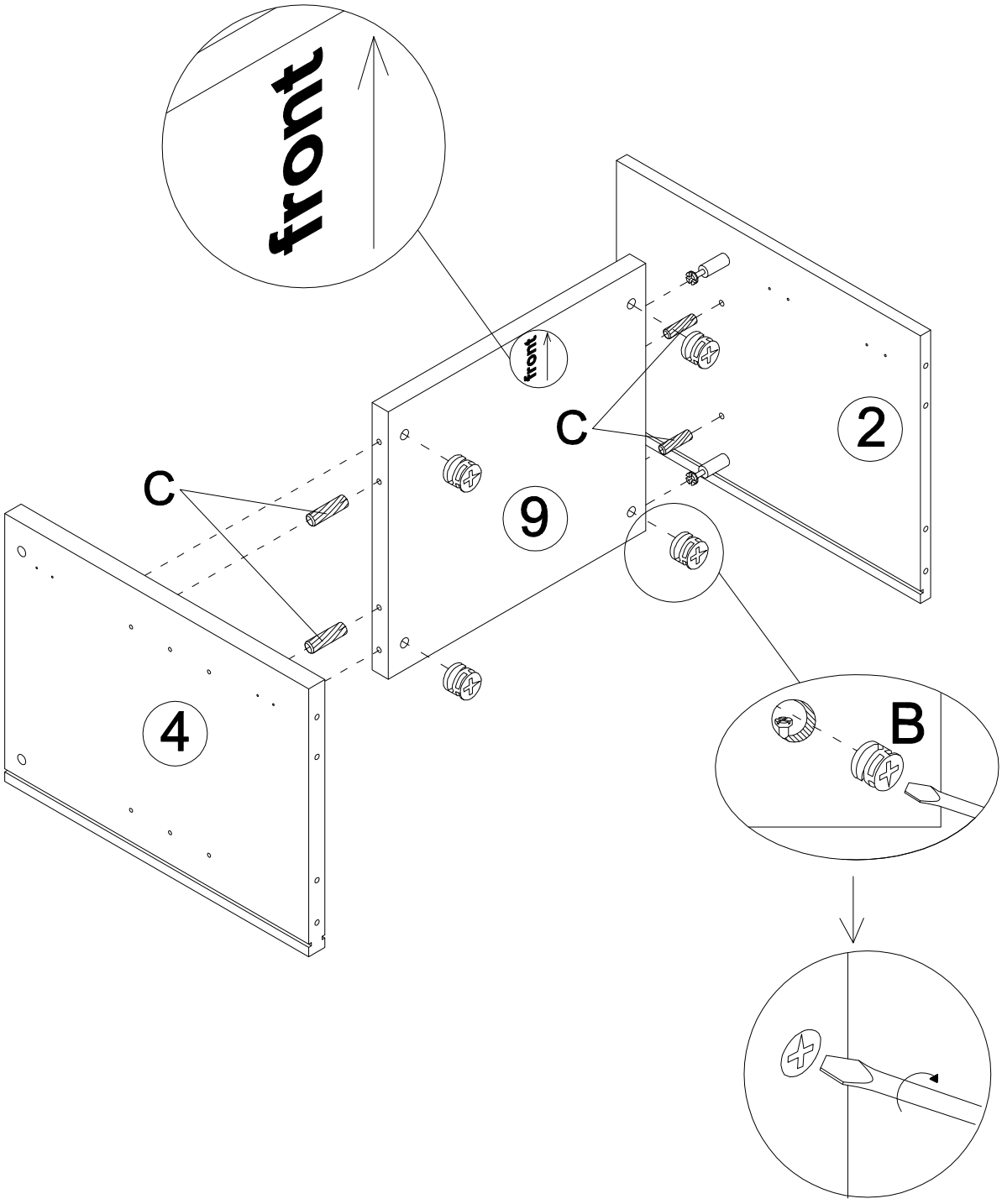

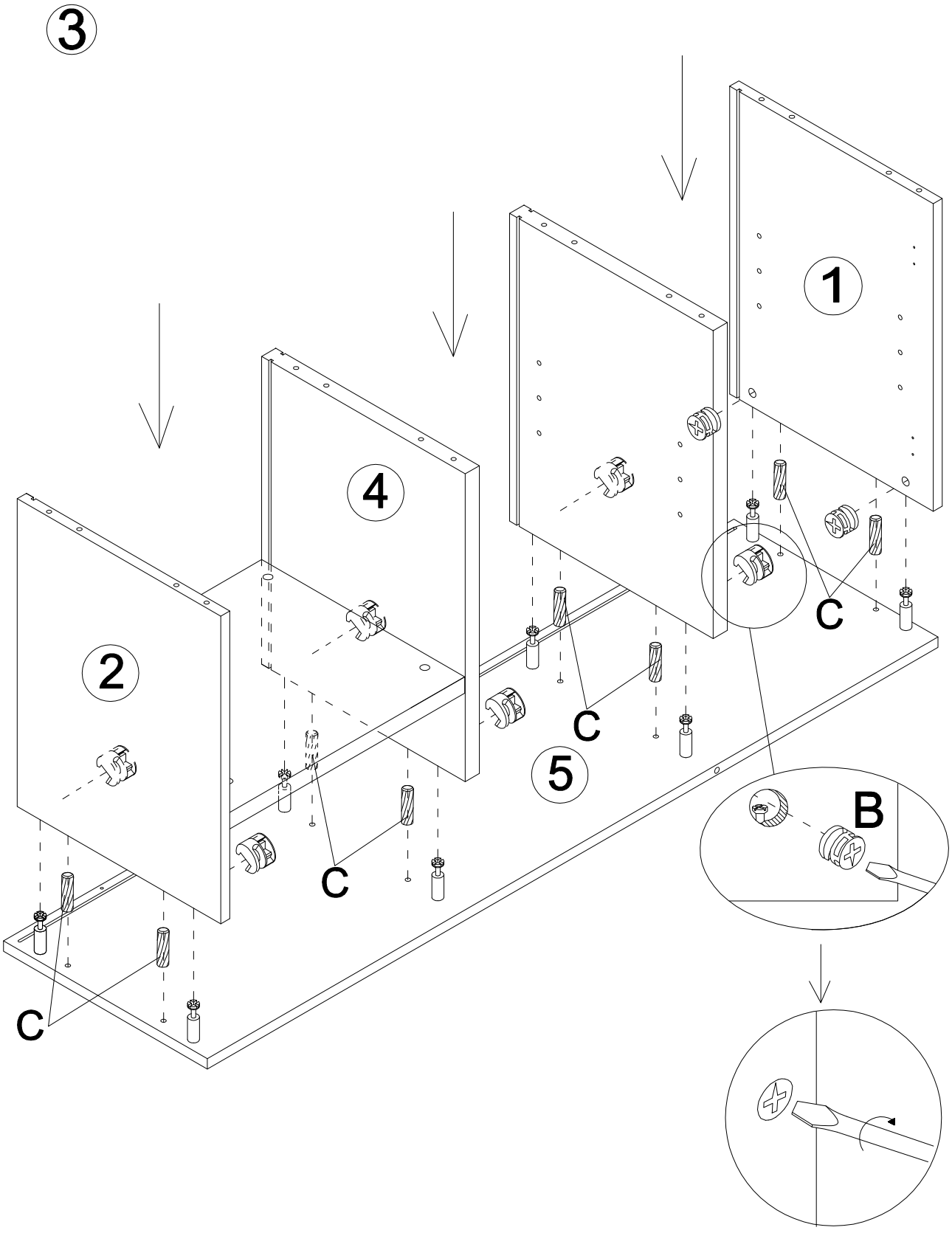
3
1
2
4
5
C
C
C
C
B

4

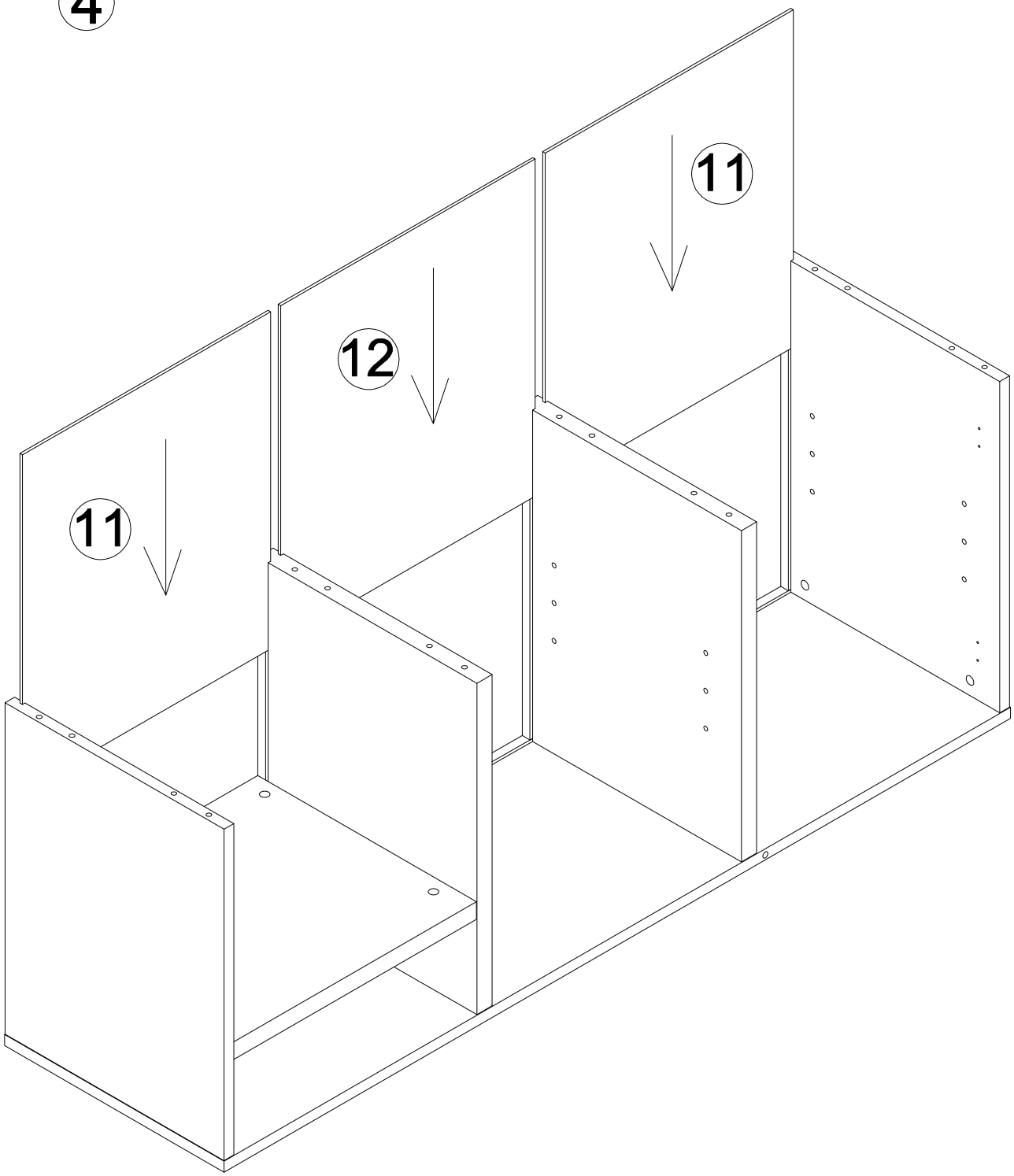

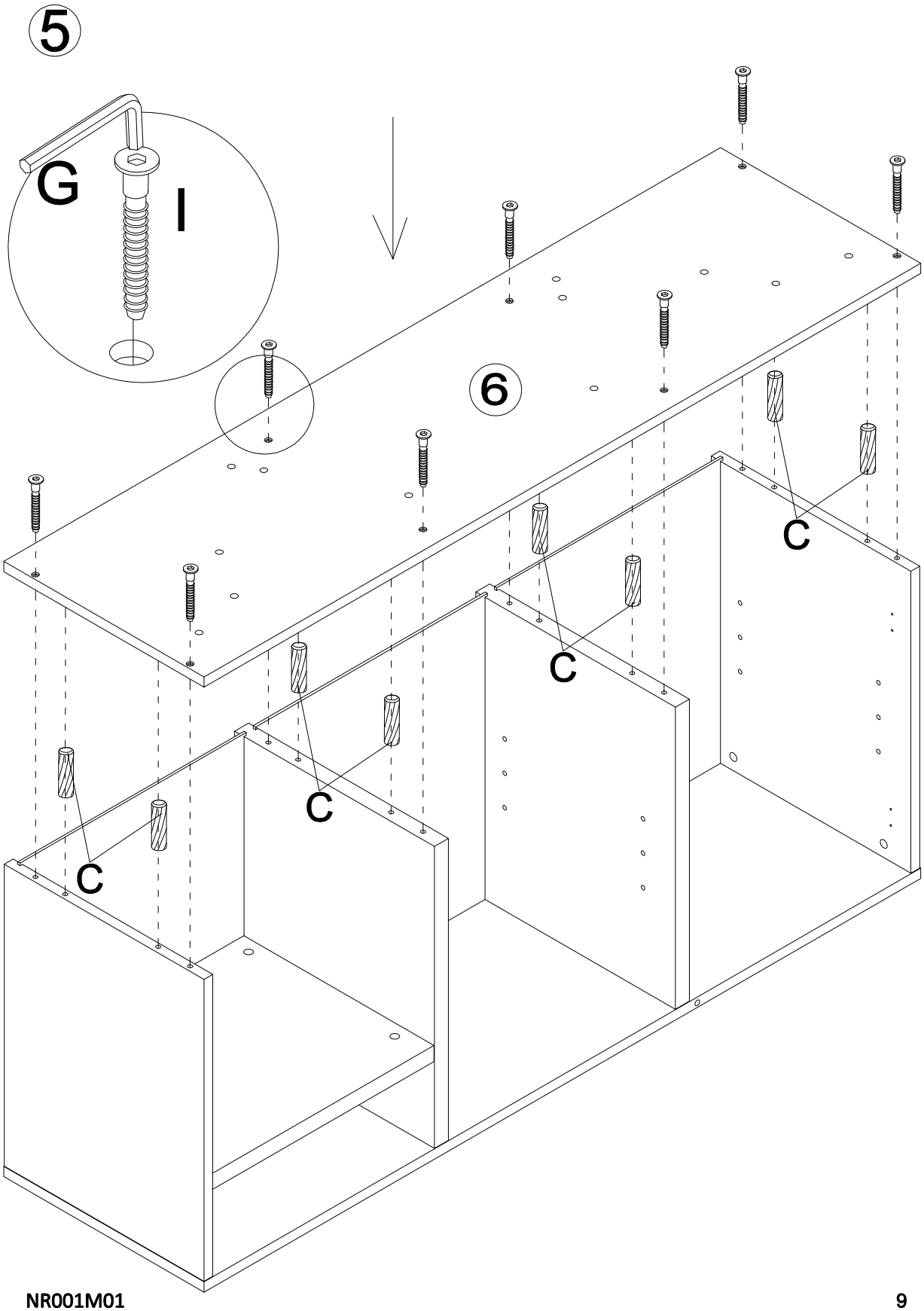
5
G
I
6
C
C
C
C

6

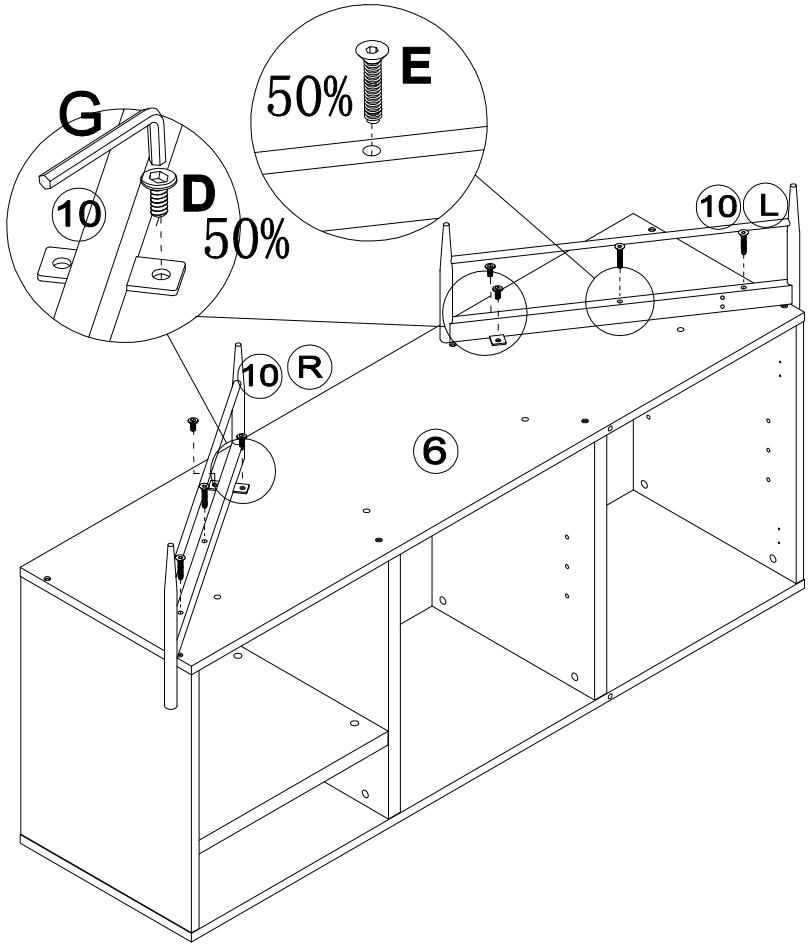

7

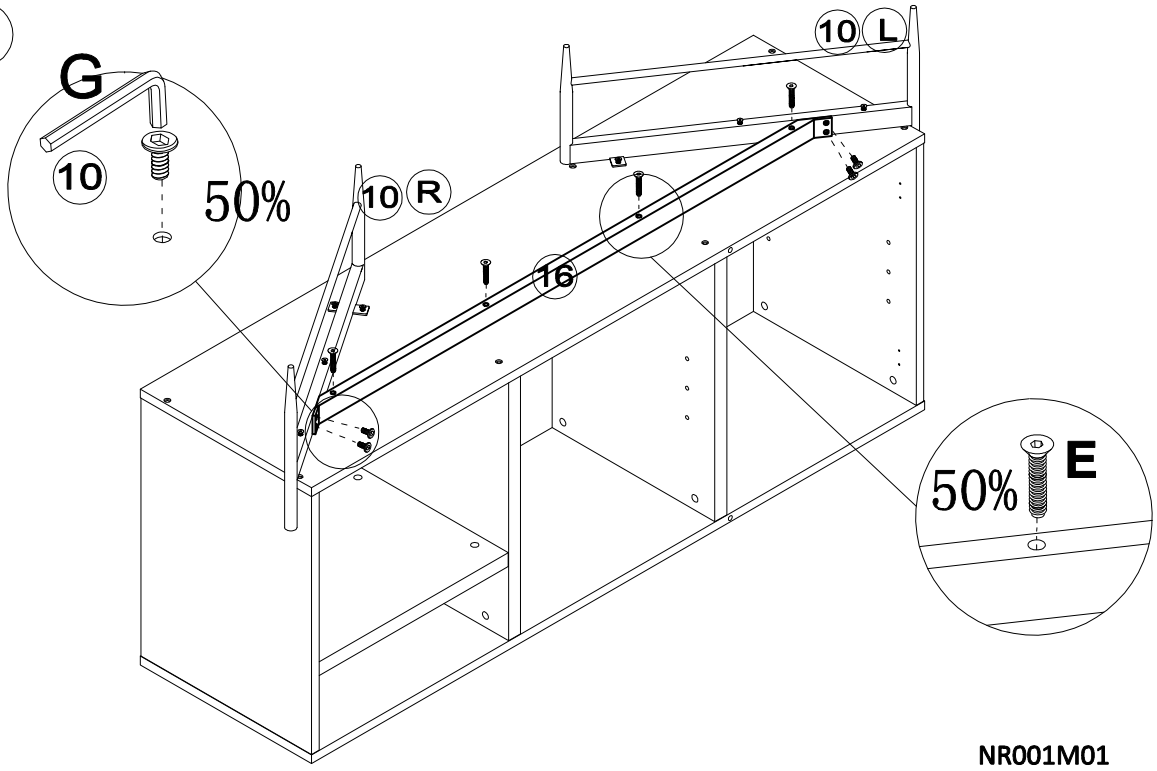

8

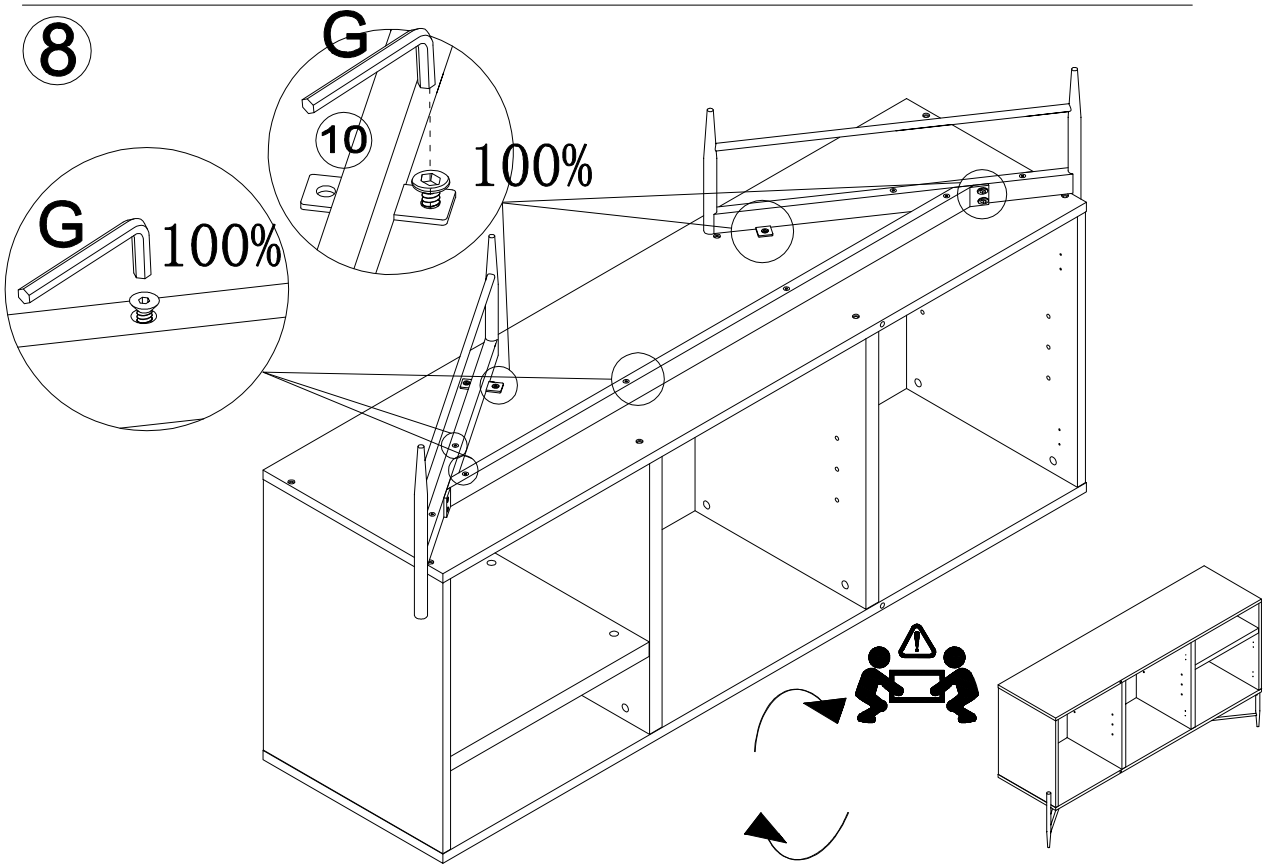

9

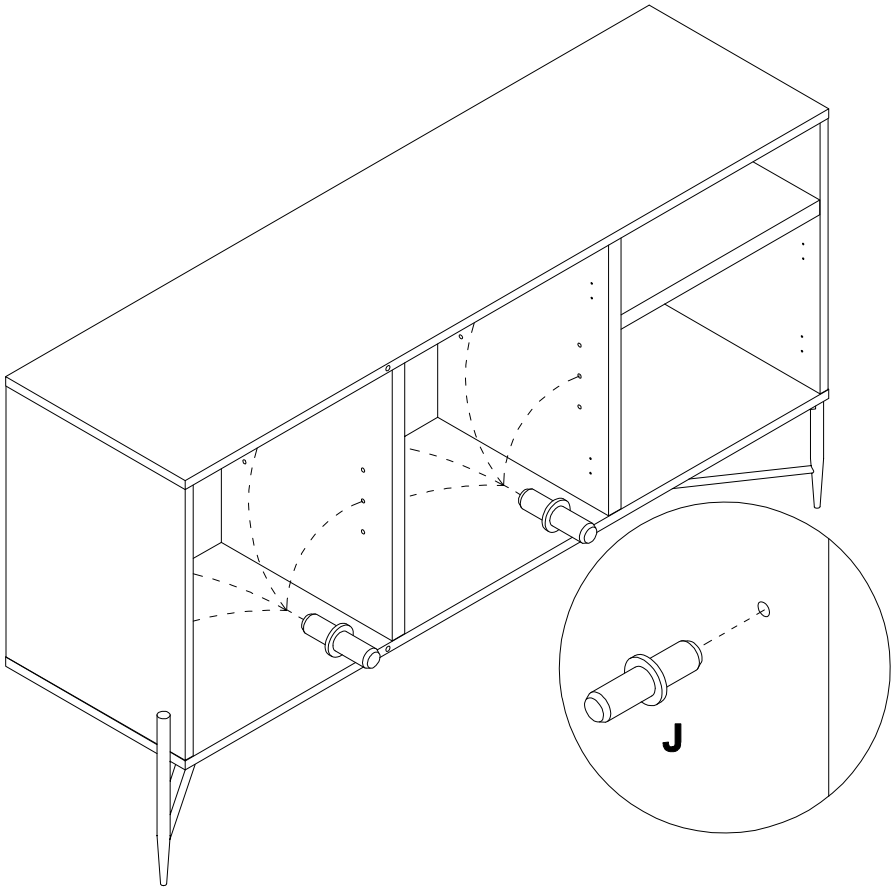

10

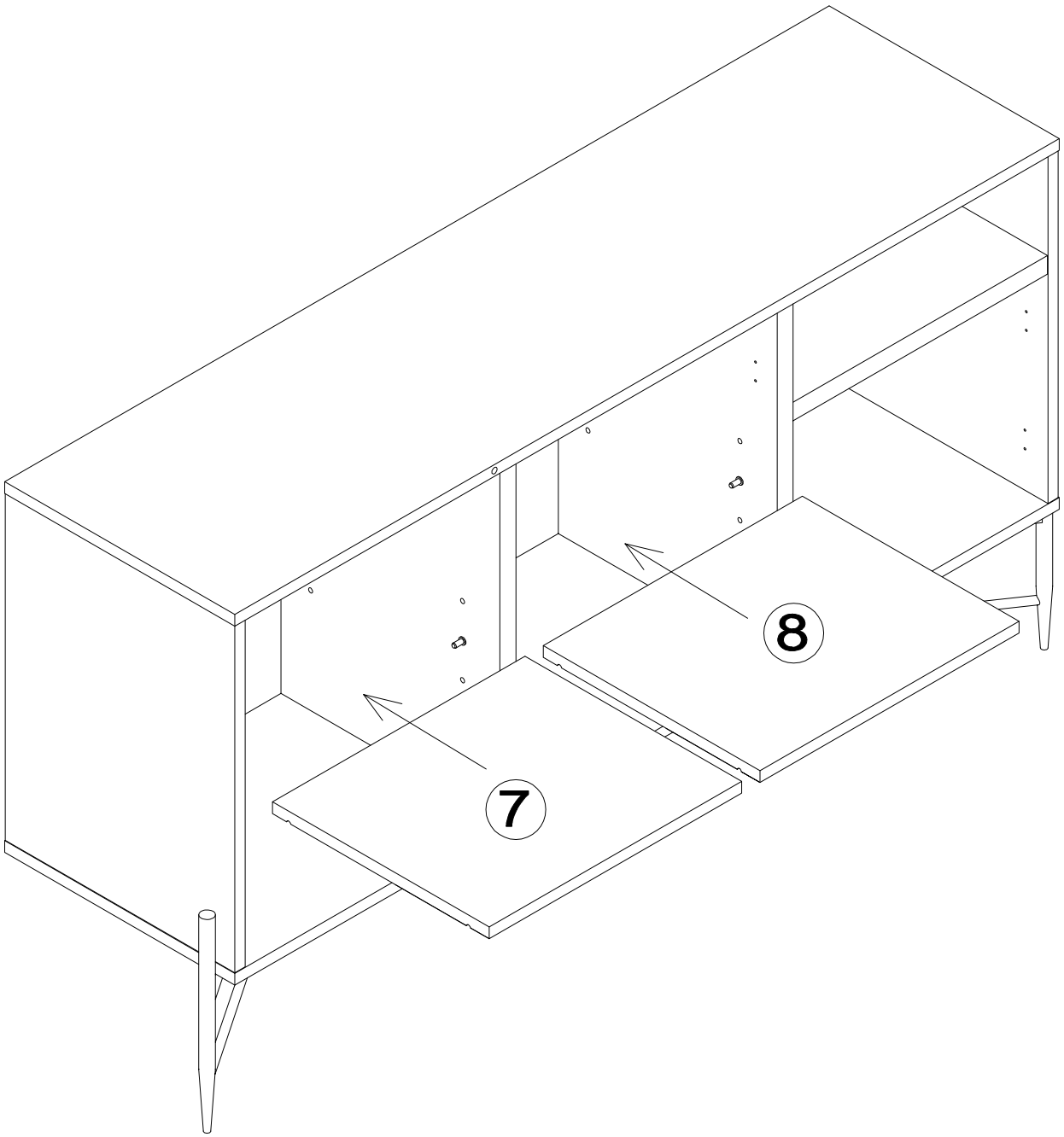

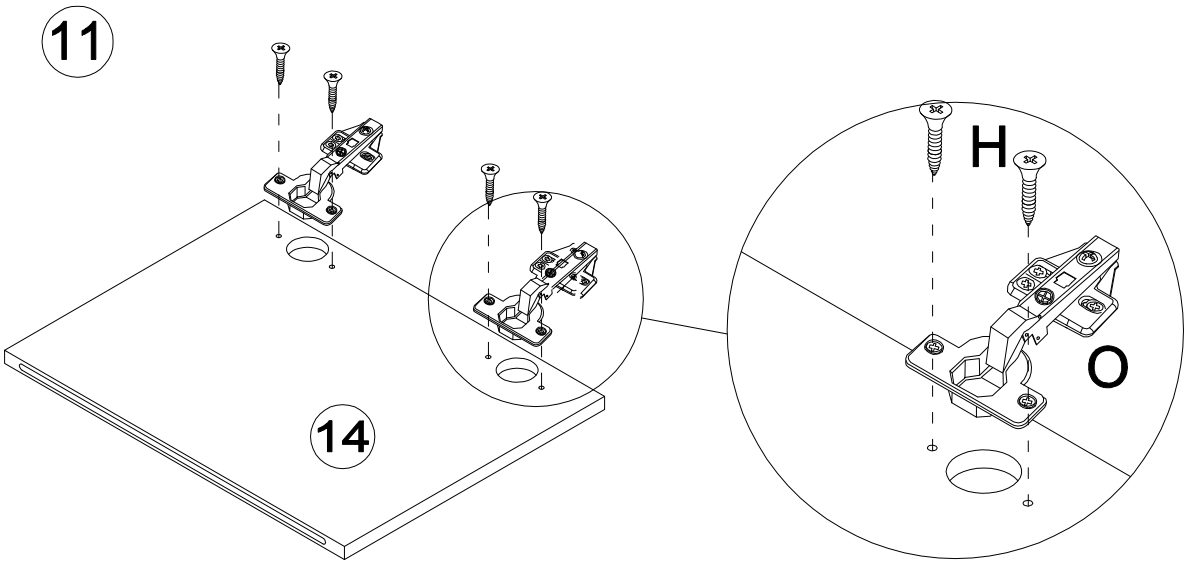
11
H
O
14

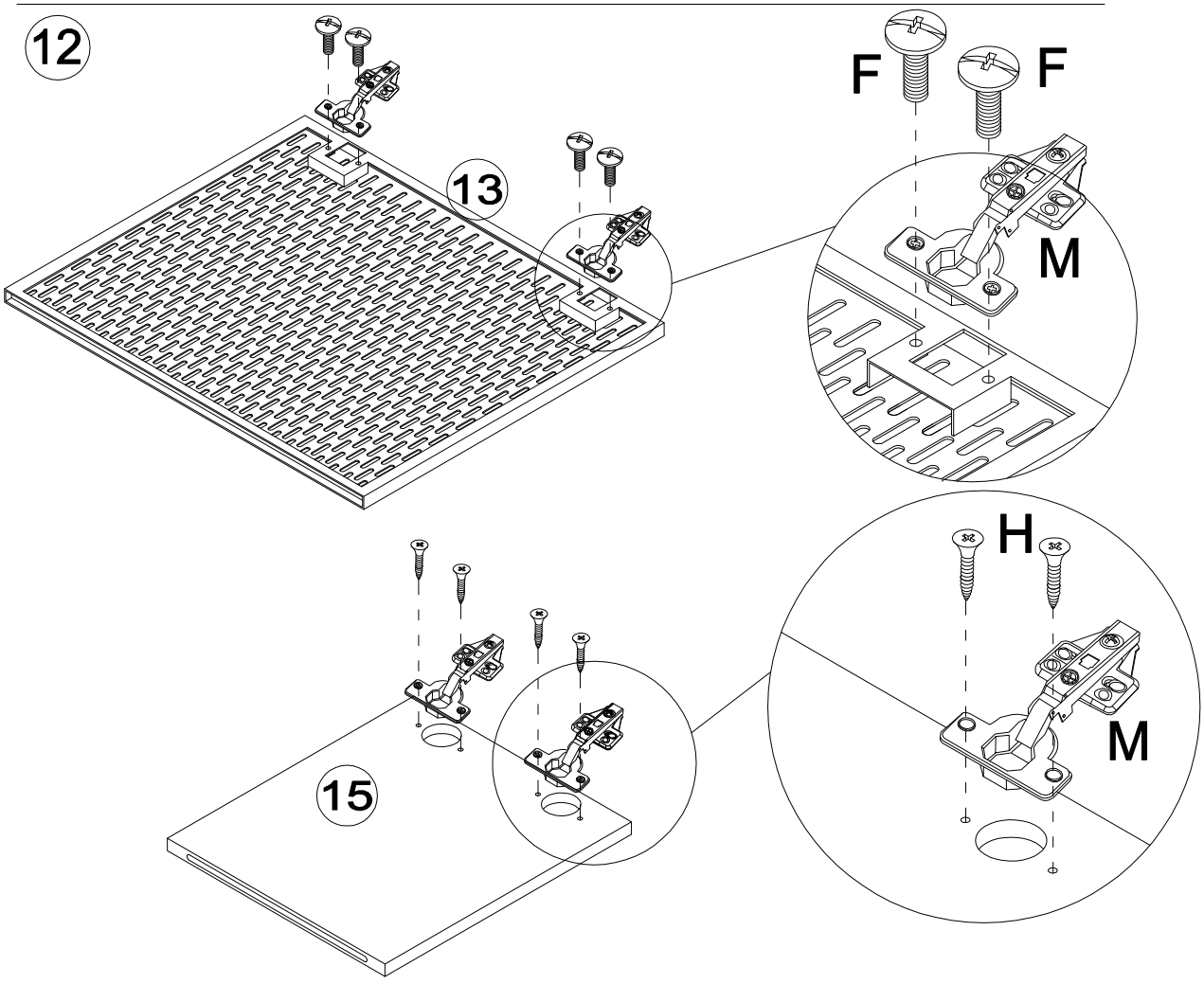
12
13
F
F
M
15
H
M

13

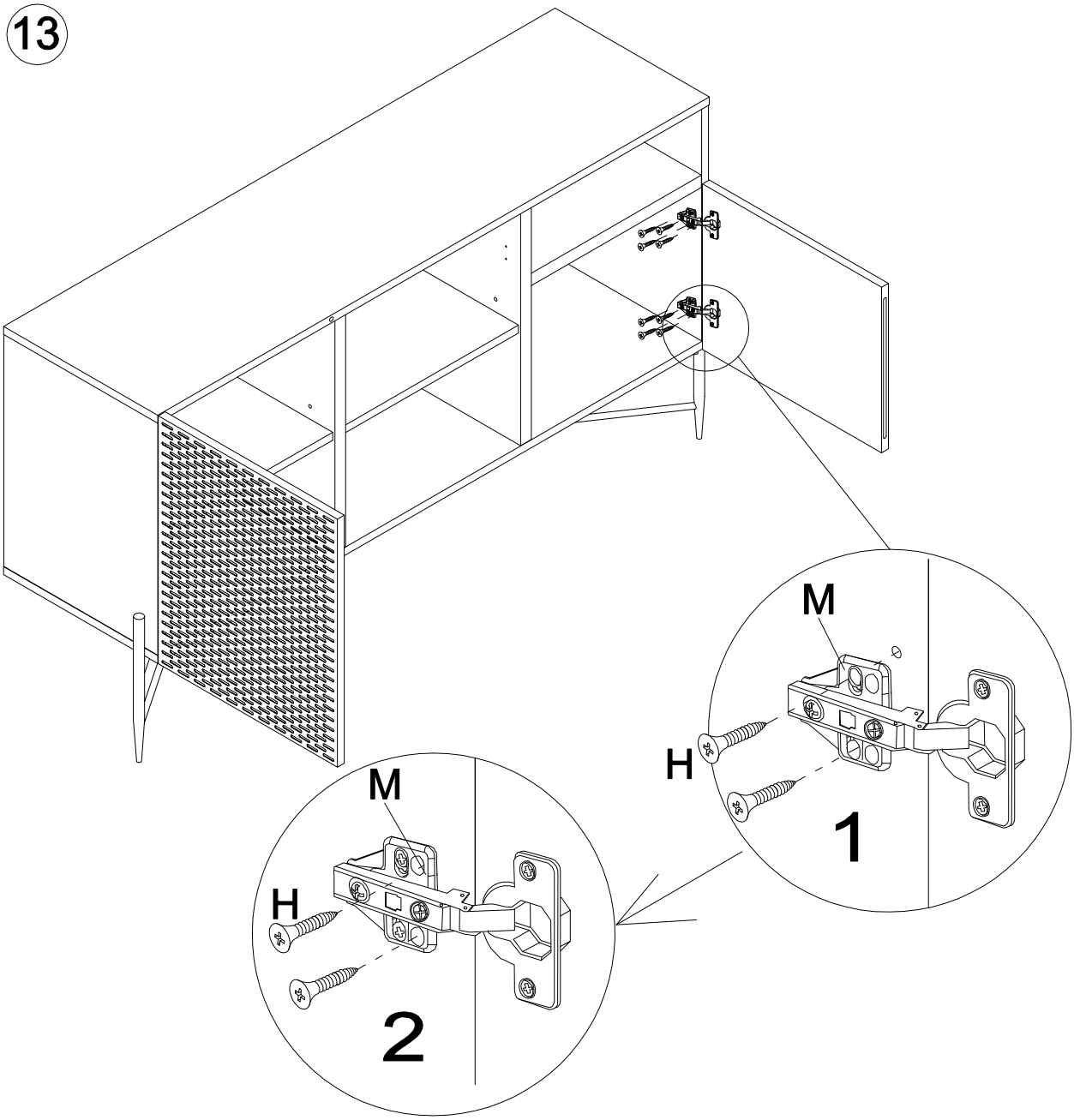

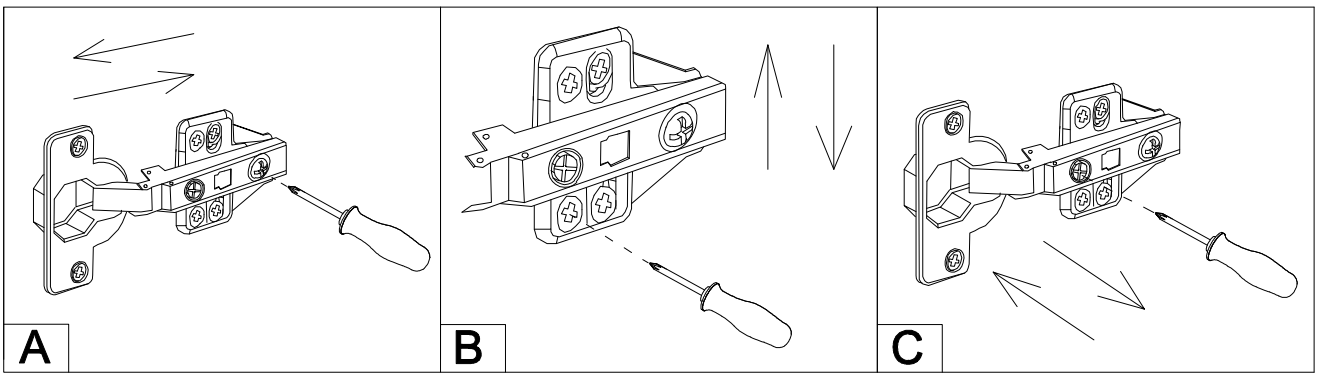

14

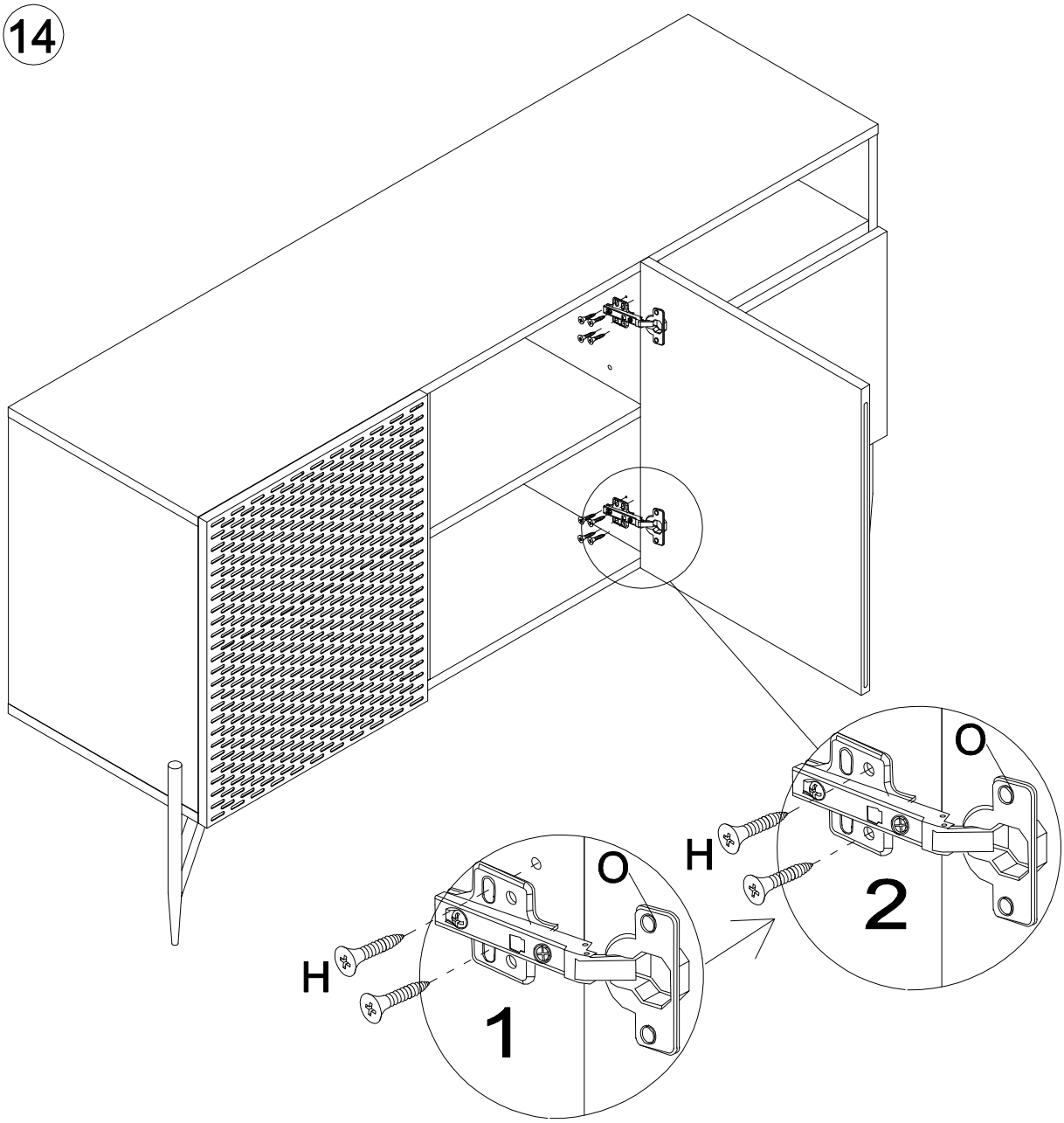

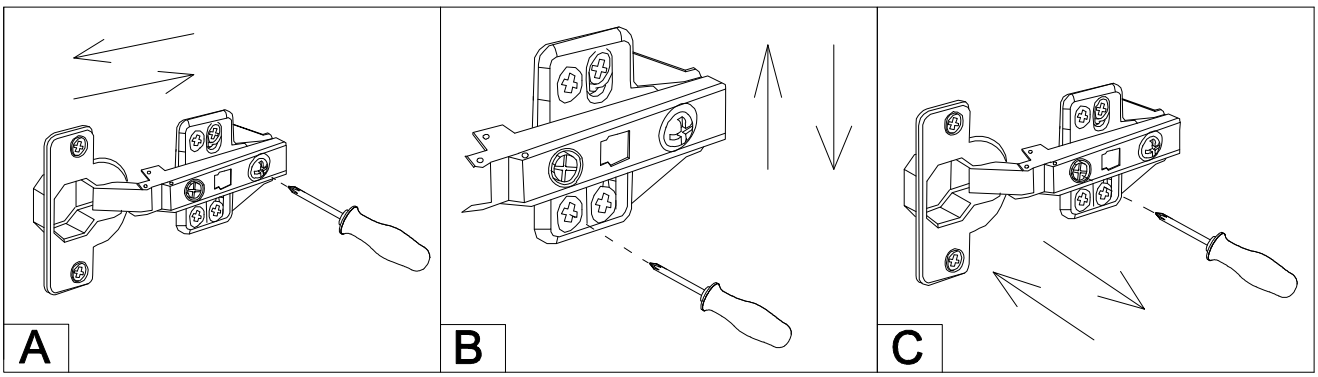

15

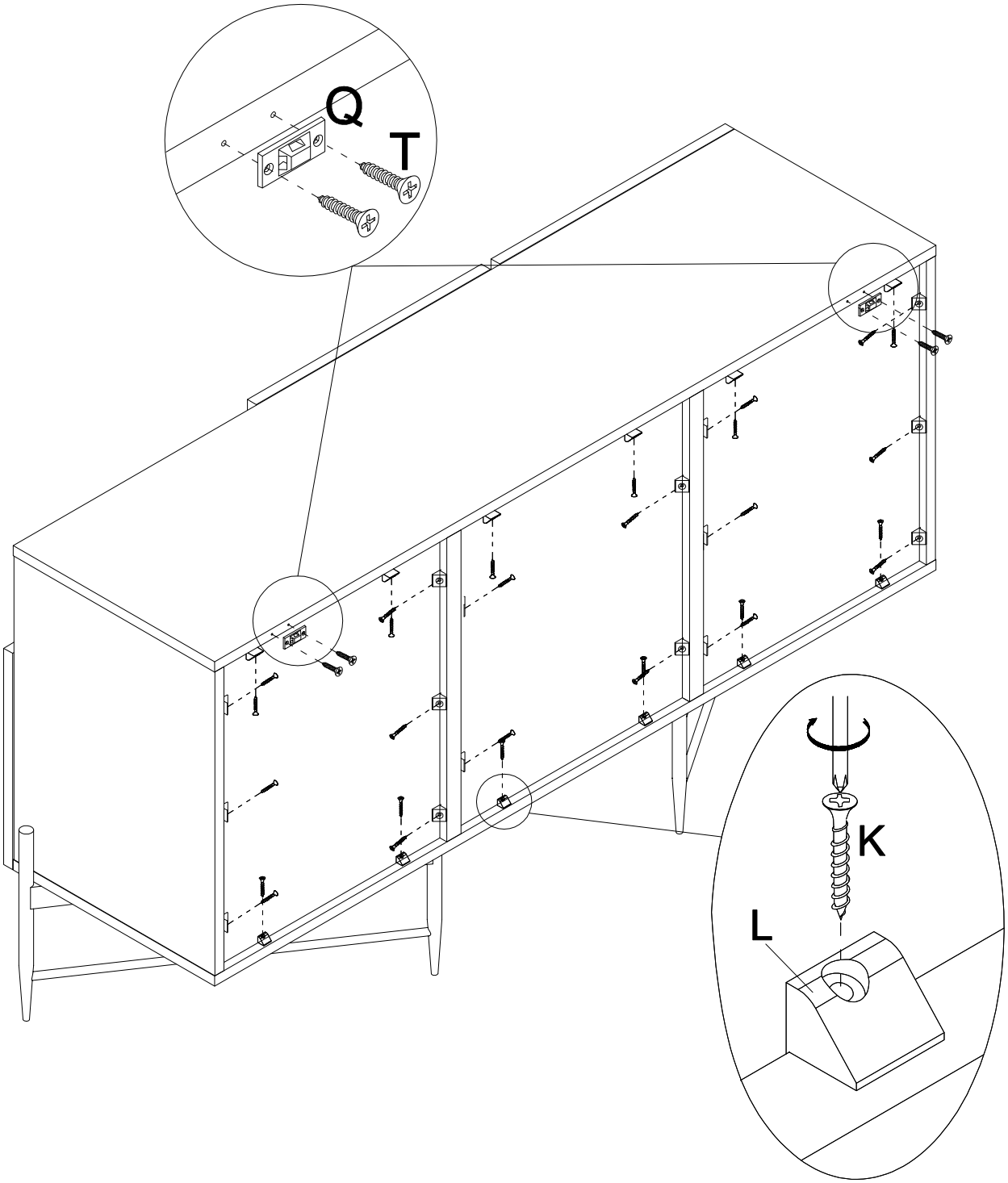

16

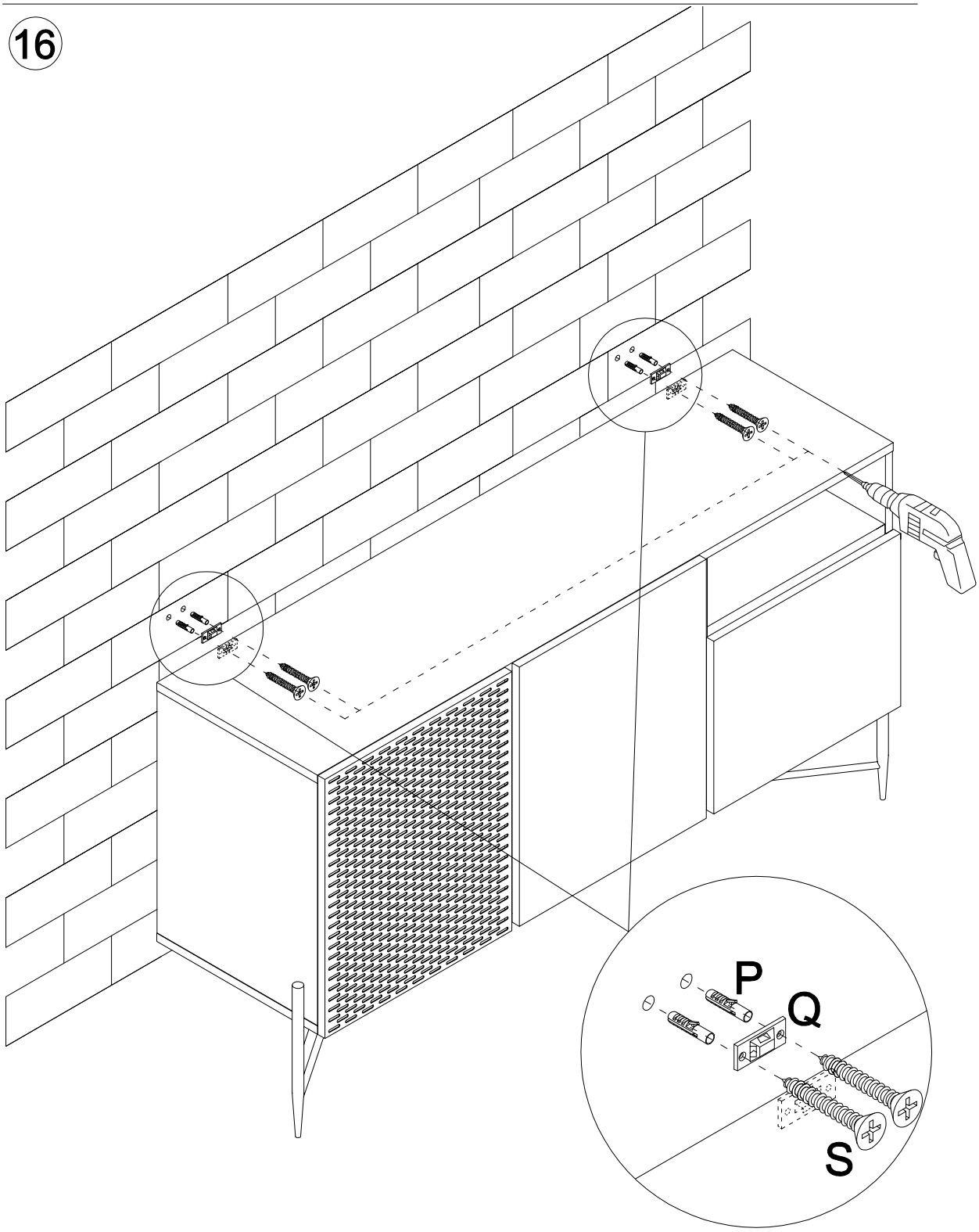

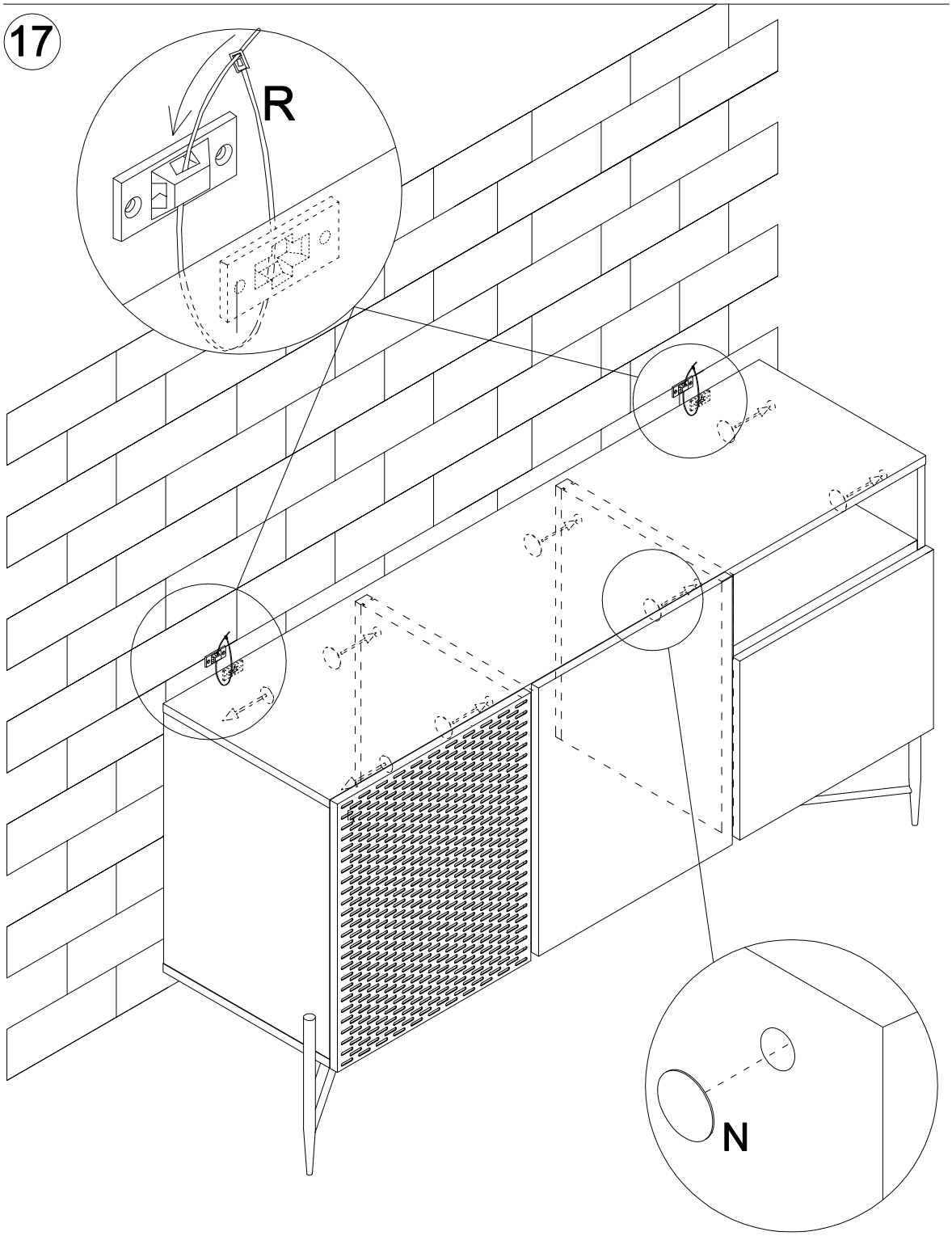
17
R
N

THAT'S ALL FOLKS!